Harmonic Reduction in multilevel inverter connected with PV Grid: A Review

Author[1], Affiliation, email, Country
Author[2], Affiliation, email, Country

Abstract: In recent years, multilevel inverters have gained more attention for top power applications. A multilevel inverter not only achieves high power ratings, but also enables the utilization of renewable energy sources. Single phase inverter is widely used for stand-alone systems and micro-grid application. The foremost limitation faced by multilevel inverters are, number of switches required large which finishes up in higher switching losses. There are many limitations in extracting power from renewable energy resources. to attenuate the facility demand and scarcity we've to strengthen the facility extracting methods. Multilevel inverter is often wont to extract power from solar cells. In this paper we work on design cascade (5 type, 7 type) multilevel inverter for increase performance of existing system and apply on grid with solar array. It synthesizes the specified ac output waveform from several dc sources. the foremost objective of this paper is to review the 5-level and 7-level Cascaded Multilevel Inverter. During this paper the numerous parameters like voltage, current, THD in 5-level and 7-level Cascaded Multilevel Inverter and analysis on solar array.

Keywords: Microgrid (MG), Multi-level inverter(MLI), Solar PV, Cascaded H-bridge, Pulse with modulation(PWM), Total harmonic distortion(THD), Renewable energy sources(RES)

1. Introduction

Industrialization and urbanization, along with the use of high energy demanding machines and smart devices are increasing power demand day by day. Conventional sources of energy require fossil fuels, which are scarce. Thermal power plants and nuclear power plants have shown their adverse effect on the environment. The transmission networks are also working nearly at its stability limit values [1-2]. Installing a new power plant and transmission system require extensive time and cost. Installation of grid-tied renewable energy sources helps in efficient handling of increased demand within the existing transmission system. Renewable energy sources like a solar cell, fuel cell, wind turbine, battery energy storage systems (BESS), small hydro, tidal etc. are envisaged to have more penetration in the grid due to green power generation along with less time and cost required for installation, compared to conventional energy sources. Solar energy, in particular, is going to have a substantial share in the future grid. Solar cells generate power directly by photovoltaic, or indirectly by using concentrating solar plants. Solar- Powered stadiums and the solar-powered airport is already in existence, many villages and distant loads have emerged in the form of a local grid, meeting with local load requirement in the form of an isolated grid [3]. Due to the advent in solar cell material, prices are coming down, and efficiency and other performance parameters are improving. The micro-grid system should act in accordance with various grid standards of electricity rules. The micro-grid integrated system should meet the following standards [4]:

- The voltage and fundamental frequency should be maintained within permissible limits
- Maintaining the current wave in-phase with voltage to achieve Unity Power Factor (UPF) operation
- Total Harmonic Distortion (THD) must be within or equal to 5%, based on IEEE-519 standards
- Possibility of system grounding to minimize leakage currents
- Automatic reclosing and synchronization of micro-sources with micro-grid system should be incorporated

The micro-grid based DG system consists of renewable micro-energy sources, Power-Conditioning Units, active/passive filter modules, control schemes and sensing elements. The most common renewable micro-energy sources are Photo-Voltaic (PV) stacks, Fuel Cells, Wind Turbines etc., which are integrated to micro-grid system by using power conditioning units. The block diagram of RES based micro-grid integrated system is represented in Fig. 1.1.

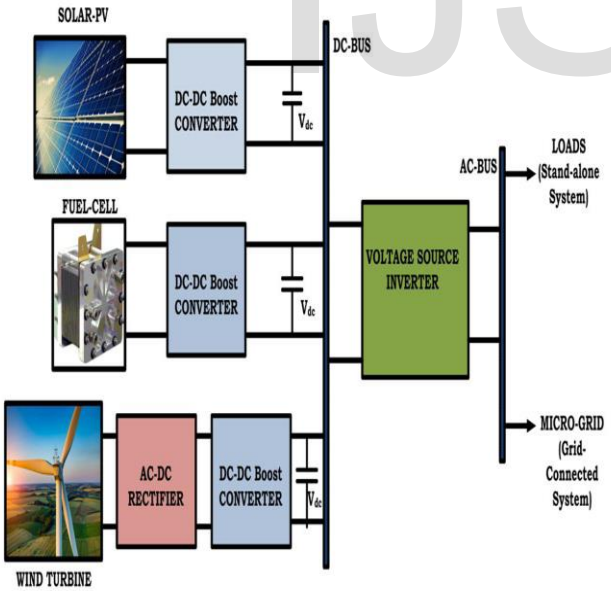

Fig. 1.1: Renewable energy sources based micro-grid system [5]

1.2 Renewable Energy Sources

In conventional power plants, electric power is generated using fossil fuels such as coal, diesel, natural gas and nuclear energy. These conventional sources are not renewable, less ecofriendly, high cost of generation, located away from load centers which increases transmission losses and not safe for social concerns [6].
On the other hand, alternate energy resources are renewable and does not exhaust in future. These resources have the added advantages:

- For energy generation, todays alternate energy resources will be considered as tomorrows main sources due to their abundant availability
- Renewable energy systems are environmental friendly
- The power supply for various loads is supplemented by different renewable energy systems
- Need for long transmission lines are eliminated as alternate generation systems have modular structure which are installed near to load centers.

1.3 Inverter Topology

A DC-AC inverter is used to convert the power available at the DC-bus to AC at fundamental frequency to meet the requirements of an AC load/micro-grid. Inverters are classified based on the number of levels in the output voltage as two level, three level, five level, seven level, and so on. The inverters with number of voltage levels greater than two are called as Multi-Level Inverters. Depending on number of phases in output voltage, they are classified as single phase and three phase inverters [7-9]. Other than micro-grid connected systems, inverters are used

in applications like adjustable speed drives, uninterruptable power supplies, FACTS etc. The development in power handling capability of static switching devices like IGBTs and MOSFETs has made them to utilize for high-power medium-voltage applications.

1.4Multi-level Inverters

In the past, Multi-Level inverters are used for generation of 3-level output. Later on, several topologies of MLIs have been developed. The concept of MLI is to attain staircase voltage waveform of high power rating by using power switches. To attain multi-level output, number of DC sources are required which are derived from RES, capacitors, batteries etc. [10-12]

The Multi-Level inverters have several advantages over a conventional two-level inverter which are summarized as:

- Staircase output voltage waveform with low THD
- Low Common-Mode voltage
- Operates at both fundamental and high switching frequencies
- However, the MLIs have following limitations:
- More number of power semiconductor switches needed
- The switches will operates with different duty ratios

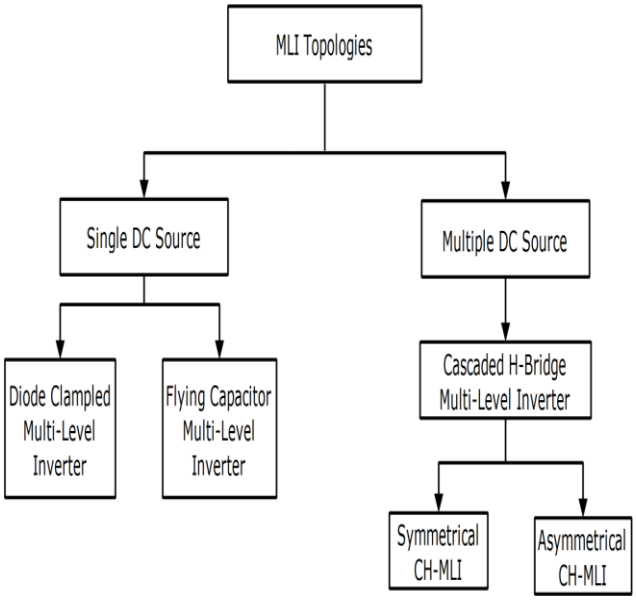

Fig. 1.2: Classification of MLI topologies [13]

The voltage and power generated from the solar panels are low. So a number of panels are connected in series to increase the voltage. Modern domestic loads require higher power and higher voltage. Hence the power from the solar panels is increased to meet the load requirements and inject surplus power if any, into the power grid. The proposed circuit diagram of multilevel inverter connected solar and wind hybrid system is shown in Fig. 1.3.The pv array and battery are connected in series to the half bridge converter which acts as a boost converter. This voltage is stepped up using a step up transformer. This transformer is a multi input transformer which also receives input from the generator connected to the wind turbine. This cumulative power generated from these sources is stepped up using the step up transformer.

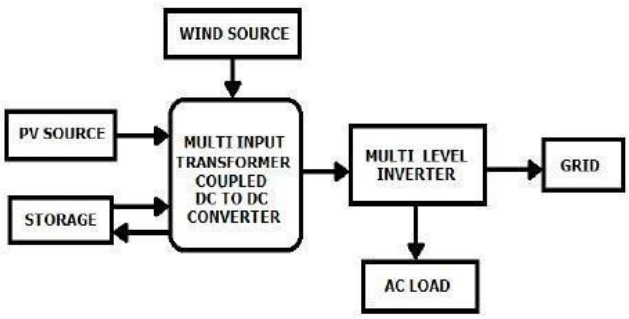

Fig 1.3: Block diagram of proposed approach

In this paper an adaptive design cascade (5 type, 7 type) provides the control voltage according to the dissimilar types of non-linear grid load variations during the testing time. For controlling the MLI semiconductor switches the resultant control voltage equivalent gate pulses are employed. The suggested control topology selectively removes the harmonic contents there in the output terminal voltage and develops the power quality of the system.

2. Literature survey

Ankit Tyagi et al. [14] This paper proposes a PV source along with MPPT technique is connected to 3-phase grid in synchronisation with the grid voltages. Initially the PV source is integrated with simple six switch power electronic device inverter which is connected to 3-Φ grid. The traditional six switch inverter is further updated with multilevel NPC inverter which generates three level three phase voltages mitigating harmonics in the PCC voltages and currents. A harmonic analysis is carried out on PCC currents with comparison of THDs, using FFT analysis tool available in `powergui' of Simulink using MATLAB software

Dishore Shunmugham et al. [15] This paper presents a novel design of an asymmetric multilevel inverter with a very few semiconductor switches for a single-phase grid-connected photovoltaic (PV) system. The proposed structure consists of 14 switches and five direct current (DC) sources to produce 27 levels. The proposed structure when connected in the cascaded form generates more voltage levels. The proposed topology is superior to other multilevel inverter topologies because of its structure. It does not need any extra circuit or polarity generation circuit (H-bridge) to come up with the negative levels. Since the proposed topology uses 5 DC sources, it can be applicable in photovoltaic farms for producing higher voltages. An efficient controller is implemented for the grid-connected system. For obtaining high-quality output voltage with less total harmonic distortion (THD), the pulses to the proposed inverter are obtained using selective harmonic elimination (SHE) technique.

C. Poongothai et al [16] In this article, the feasibility of selective harmonic elimination for grid-connected operation of low voltage DC sources is presented. An appropriate fixed switching pattern is able to achieve good quality current while minimizing switching operations, thereby improving the inverter efficiency. In an attempt to establish the potential advantages over conventional PWM techniques, this article demonstrates the application of SHE in grid connect applications, especially in high power levels while maintaining the ability to provide an independent control of active and reactive powers. An LCL filter has been used for grid interface. The switching pattern and the development of control structure are presented. Simulation studies are discussed and experimental results shown validate the proposed scheme.

N. A. Rahim, et al. [17] This paper presents a single-phase five-level grid-connected PV inverter with a novel dual reference modulation technique. Two reference signals identical to each other with an offset equivalent to the amplitude of the triangular carrier signal were used to generate PWM signals. The inverter consists of a full-bridge inverter and an auxiliary circuit comprising four diodes and a switch. The inverter produces output voltage in five levels:

zero, +1/2V dc , V dc , -1/2V dc and -V dc . A digital PI current control algorithm is implemented in DSP TMS320F2812 to keep the current injected into the grid sinusoidal and to have high dynamic performance with low THD. The validity of the proposed inverter is verified through simulation and implemented in a prototype. The experimental results are compared with conventional single-phase three-level grid-connected PWM inverter in terms of THD.

Zeina k Gurgi et al. [18] This paper investigates the utilization of Multilevel Inverter (MLI) to reduce the harmonics of grid-connected photovoltaic (PV) system. MLIs act as a promising interface in medium voltage networks for many usages because their modularity and lower voltage stress towards the switches. In addition, they provide a high-form output with low symmetric deformation. It is proposed to use a Cascaded H-Bridge MLI (CHB-MLI) with network-linked PV systems since they require many sources on the DC side with phaseshifted carriers pulse width modulation. The mission of these converts is to synthesize a staircase AC output voltage from several DC voltage levels. A seven-level modular CHB-MLI is analyzed for grid-connected PV system with a Maximum Power Point Tracking (MPPT) algorithm.

Ridima Chaudhary et al. [19] In this paper a grid connected five level CMLI (Cascaded Multilevel Inverter) topology for PV systems is presented. Maximum power from solar PV (photo voltaic) array is extracted by providing controlled duty cycle to DC-DC boost converter. Control of Duty cycle is done using P&O (Perturb and Observe) type MPPT (Maximum Power Point Tracking) algorithm. After that control switching pulses are applied to five-level CMLI for conversion of DC voltage into AC. The output of the inverter is then supplied to the grid. The leakage current is reduced using low frequency transitions. Simulation results of voltage and current waveform of grid, PV array, stabilized output of MPPT and of CMLI is also shown.

Mahrous Ahmedet al.[20] This paper presents a new single-phase asymmetrical cascaded multilevel DC-link inverter. The proposed inverter comprises two stages. The main stage of the inverter consists of multiple similar cells, each of which is a half-bridge inverter consisting of two switches and a single DC source. All cells are connected in a cascaded manner with a fixed neutral point. The DC source values are not made equal to increase the performance of the inverter. The second circuit is a folded cascaded H-bridge circuit operating at a line frequency.

Pavan Mehta et al. [21] The comparative analysis of active neutral point clamped (ANPC) multilevel inverters (MLIs) with classical MLIs such as neutral point clamped (NPC) MLI, and flying capacitor (FC) MLI is presented in this paper. The natural voltage balancing across dc link capacitor is achieved in steady state using ANPC MLI. The redundant switching sequence logic is generated using phase-shifted pulse-width modulation (PS-PWM) strategy. Total harmonic distortion is presented at different modulation indices for 3-level and 5-level inverter voltage output. The simulation results are presented for the verification.

Jose I. Leon et al. [22] Multilevel converters are an attractive solution mainly for medium-power high-voltage applications, and many commercial products can be found. Taking into account the measurements of the power system, a first stage of the control structure is usually the outer control loop which takes into account the control targets defined by the user in order to generate the reference currents to be generated by the power converter.

J. I. Leon et al. [23] Modulation of multilevel converters is the focus of researchers looking for

high quality of the output waveforms with low losses. This paper shows that multiple switching sequences can be used in order to generate the desired phase voltage. A simple two-dimensional modulation technique for two-cell multilevel cascaded converters is introduced in this paper. Using a two-dimensional control region, all the possible switching sequences of the power converter are taken into account. The final switching sequence can be chosen improving some power converter features. Simulation results are shown in order validate the proposed technique

According to the existing literature survey, there is no significant approach is used to resolve the issue of harmonic reduction by using a cascaded circuit. In present work a new strategy for Harmonic minimization in a microgrid systere by using solar PV connected array.

3. Methodology

3.1 Modern Multi-Level Inverter

The MLI topologies attracted the attention of researchers and lot of research has been carried out to implement modern MLIs. The conventional MLI topologies are reviewed and presented in the previous section and it was found that for higher voltage levels, they require excessive switching components, high dv/dt stress, capacitor voltage balancing issues, low efficiency and complex gate drive circuitry [24-25]. To overcome these concerns, modern MLI topologies are introduced to enhance the output voltage.

3.2 Modulation Techniques

The main intention of modulation scheme is to eliminate lower order harmonics by generating optimal switching states. The inverters or MLIs are driven by low switching frequency and/or high switching frequencies. The low or fundamental switching frequency is restricted due to dominant lower order harmonics. In high frequency modulation scheme, the carriers with high frequencies are compared with sinusoidal reference wave for generation of optimal switching states which is named as sinusoidal PWM technique [26].

3.3 Harmonic analysis of PWM and Sine PWM

Inverters convert dc input into variable voltage variable frequency ac output. To achieve the conversion from dc-ac, switches were turned on and off for a predetermined time period and were providing fixed voltage variable frequency output. Such inverters provide square wave output and popularly governed by 120° and 180° control scheme [27-30]. As square wave output is away from sinusoidal, such inverter's output had considerably large harmonics. A Pulse width modulation scheme is aimed to provide internal voltage control and is also known to reduce harmonics. Sine PWM method is popularly used in industry as output waveform is synthesized near to sine wave and has lower harmonics. The harmonic pollution created by dc-ac conversion is measured in terms of the total harmonic distortion (THD) and contribution by individual

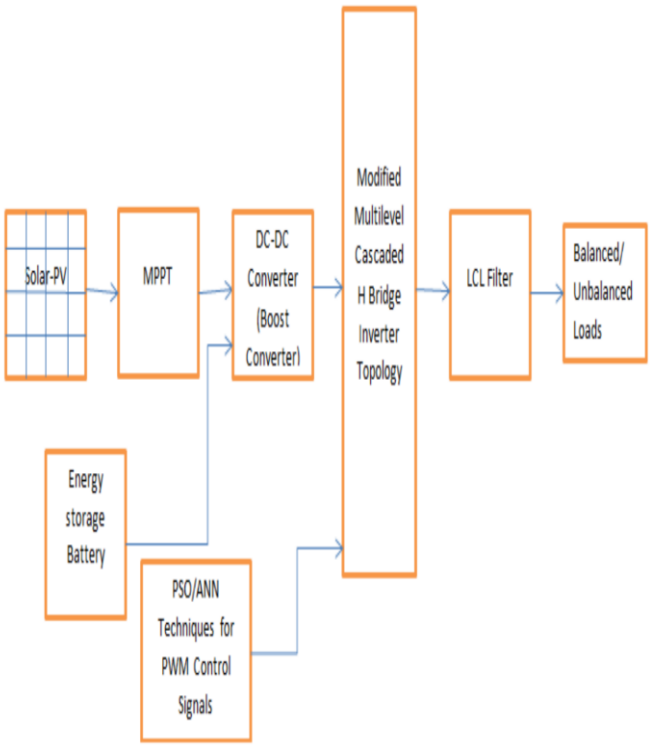

ht

harmonic [31-33].

3.4 Design of the Overall Sytem

The photovoltaic system converts the light energy of sun into electrical energy with the help of solar stages. The generated electricity is in direct current (DC) form. An energy storage battery is used for continuous power supply

Fig: 3.1: Block diagram of Overall designed system

A DC-DC boost converter is connected to the solar PV system along with battery storage and is equipped with maximum power point tracking (MPPT) – Incremental Conductance algorithm for extracting maximum energy maximum power point (MPP) changes continuously because of continuous changes in the irradiance level of the sun, P&O takes a wrong calculation due to perturbation, but Incremental Conductance improves due to the samples taken for voltage and current for MPP calculation. With the multilevel inverters the harmonic distortions can be reduced with the increase in the higher levels of output. With separate dc sources the cascaded multilevel inverters, in our research a modified topology of 7 level 6 switches cascaded multilevel inverter. Switching power devices causes harmonics in the sensitive equipments which are connected to the non-linear loads for the applications of higher kilowatts, hence an LCL filter is connected at the output of modified multilevel inverter to reduce the total harmonic distortion (THD) in the islanded microgrid as shown in the block diagram.

4. Conclusion

The various advantage of increasing the power and voltage level, the multilevel inverter enhances the flexibility of reducing the number of panel connected together or reducing the turns ratio of the transformer and even using a lower rating components which reduces the cost of equipment and the level of insulation to be provided.

The simulation results show the increased voltage level in case of a multilevel inverter application compared to conventional inverter. Also multilevel inverters produces lower total harmonic distortion compared to conventional inverters and the total harmonic distortion in case of multilevel inverters can be further reduced by increasing the number of levels.

.

Acknowledgement:

Conflict of interest: Author has no conflict of interest

References

[1] Verma Arun, Singh Bhim, C & Kaushik, S 2010, ‘An Isolated Solar Power Generation using Buck Converter and Boost Inverter’, Journal of Engineering and Information Technology, vol. 2.

[2]Tony Hoevenaars, P, Kurt LeDoux, PE & Matt Colosino 2003, ‘Interpreting IEEE Std 519 and Meeting its Harmonic Limits in VFD Applications.

[3] Timothy J Ross 2010, ‘Fuzzy Logic with Engineering Applications’, Third Edition, John Wiley & Sons, Ltd.

[4] E S Gavanidou and A G. Bakirtzis, “Design of a stand-alone system with renewable energy sources using trade off methods”, IEEE

Transactions on Energy Conversion, Vol. 7, no. 1, pp. 42-48, 1992.

[5] D. J. Roughley, "Electricity generation from sources of renewable energy", Power Engineering Journal, Vol. 7, no. 3, pp. 117-122, 1993.

[6] J. Chavarria, D. Biel, F. Guinjoan, C. Meza, and J. Negroni, "Energy-balance control of PV cascaded multilevel grid-connected inverters under level-shifted and phase-shifted PWMs", IEEE Transactions on Industrial Electronics, Vol. 60, no. 1, pp. 98-111, 2013.

[7] Jih-Sheng Lai and Fang Zheng Peng, "Multilevel converters-a new breed of power converters", IEEE Transactions on Industry Applications, Vol. 32, no. 3, pp. 509-517, 1996.

[8] B. P. McGrath and D. G. Holmes, "Multicarrier PWM strategies for multilevel inverters", IEEE Transactions on Industrial Electronics, Vol. 49, no. 4, pp. 858-867, 2002.

[9] D. J. Roughley, "Electricity generation from sources of renewable energy", Power Engineering Journal, Vol. 7, no. 3, pp. 117-122, 1993.

[10] C. Feng and V.G. Agelidis, "A DSP-based controller design for multilevel flying capacitor converters", Applied Power Electronics Conference and Exposition, Nineteenth Annual IEEE, Anaheim, Vol. 3, pp. 1740-1744, 2004.

[11] T. Bruckner and D. G. Holmes, "Optimal pulse-width modulation for three-level inverters", IEEE Transactions on Power Electronics, Vol. 20, no.1, pp. 82-89, 2005.

[12] A. Shukla, A. Ghosh, and A. Joshi, "Capacitor voltage balancing schemes in flying capacitor multilevel Inverters", IEEE Power Electronics Specialists conference, Orlando, FL, USA, pp. 2367-2372, 2007.

[13] S. N. Rao, D. V. A. Kumar, and C. S. Babu, "New multilevel inverter topology with reduced number of switches using advanced modulation strategies", International Conference on Power, Energy and Control, India, pp. 693-699, 2013.

[14] Ankit Tyagi, Manisha, " Harmonics Mitigation for Grid Connected PV Module with Integration of Multilevel Inverter Topology",International Conference on Advances in Computing, Communication & Materials (ICACCM), 2020

[15] Dishore Shunmugham Vanaja, "A novel PV fed asymmetric multilevel inverter with reduced THD for a grid-connected system", International Transactions on Electrical Energy Systems volume 30 issue 4, 2020

[16] C. Poongothai Krishna Vasudevan, "A novel approach for grid-connected inverter operation based on selective harmonic elimination", International Transactions on Electrical Energy Systems, 2020

[17] N. A. Rahim, J. Selvaraj, " Multilevel inverter with dual reference modulation technique for grid-connected PV system", IEEE Power & Energy Society General Meeting, 2009

[18] Zeina k Gurgi, Doaa M. Yehia, "Harmonic Reduction for Grid-Connected Photovoltaic System based on Multilevel Inverter", AUSTRALIAN JOURNAL OF BASIC AND APPLIED SCIENCES, 2018

[19] Ridima Chaudhary, R.S. Bhatia, "A Grid Connected Five Level Cascaded Multilevel Inverter for PV Systems",2nd International Conference on Trends in Electronics and Informatics (ICOEI), 2018

[20] Mahrous Ahmed and Essam Hendawi, "A New Single-Phase Asymmetrical Cascaded Multilevel DC-Link Inverter", Journal of Power Electronics, Vol. 16, no. 4, pp. 1504-1512, 2016.

[21] Mehta Pavan, and Mayank Kumar. "Capacitor voltage balancing and THD analysis in ANPC multilevel inverter", IEEE conference on Engineer Infinite, 2018.

[22] Jose I. Leon, Sergio Vazquez, "MULTILEVEL CONVERTERS – CONTROL AND OPERATION IN INDUSTRIAL SYSTEMS",Power Electronics in Renewable Energy Systems and Smart Grid on pages 219 to 270, 2019

[23] J. I. Leon, S. Vazquez, R. Portillo , "Two-dimensional modulation technique for multilevel cascaded H-bridge converters",IEEE International Conference on Industrial Technology, 2009

[24] F. L. Luo and H. Ye, "Laddered multilevel DC/AC inverters used in solar panel energy systems", IET Power Electronics, Vol. 6, no. 9, pp. 1769-1777, 2013.

[25] Maureen Smerdon "Spartan-6 FPGAs: Performance, Power, and I/O Optimized for Cost-Sensitive Applications", WP396 (v1.2), 2017.

[26] C. J. Gajanayake, D. M. Vilathgamuwa, and Poh Chiang Loh, "Modeling and design of multi-loop closed loop controller for Z-source inverter for Distributed Generation", 37th IEEE Power Electronics Specialists conference, Jeju, South Korea, pp. 1-7, 2006.

[27] L. Malesani, P. Tenti, E. Gaio, and R. Piovan, "Improved current control technique of VSI PWM inverters with constant modulation frequency and extended voltage range", IEEE Industry Applications Society Annual Meeting, Pittsburgh, PA, USA, Vol. 1, pp. 722 – 727, 1988.

[28] X. Mao, R. Ayyanar and H. K. Krishnamurthy, "Optimal Variable Switching Frequency Scheme for Reducing Switching Loss in Single-Phase Inverters Based on Time-Domain Ripple Analysis", IEEE Transactions on Power Electronics, Vol. 24, no. 4, pp. 991-1001, 2009.

[29] J. Nagarjuna Reddy, M. Kalia Moorthy, and D. V. Ashok Kumar, "Control of grid connected PV cell distributed generation systems", TENCON IEEE Region 10 Conference, Hyderabad, India, pp. 1-6, 2008.

[30] E Cadaval, G Spagnuolo, L G Franquelo, C A Paja, Suntio, and Michael Xiao, "Grid-connected photovoltaic generation plants: Components and operation", IEEE Industrial Electronics Magazine, Vol. 7, no. 3, pp. 6-20, 2013.

[31] K. Gopalakrishnan, S. Das, and G. Narayanan, "Analytical Expression for RMS DC Link Capacitor Current in a Three Level Inverter", Centenary conference, Indian Institute of Science, Bangalore, 2011.

[32] M. R. Banaei, A. R. Dehghanzadeh, E. Salary, H. Khounjahan, and R. Alizadeh, "Z-source-based multilevel inverter with reduction of switches", IET Power Electronics, Vol. 5, no.3, pp. 385-392, 2012.

[33] Bo Cao, "A Variable Switching Frequency Algorithm to Improve the Total Efficiency of Single-Phase Grid-Connected Inverters", Applied Power Electronics Conference and Exposition, USA, pp. 2310-2315, 2013.